TITLE 24 REPORT

Title 24 Report for:

Industrial Building Alteration (Mechanical)
12811 Foothill Boulevard
Pacoima, CA

Project Designer:

Solargy, Inc. Tom Rotchford P.E.
22028 Ventura Boulevard, Suite 207
Woodland Hills, CA 91364
(818) 347-6096

Report Prepared By:

Solargy, Inc.
SOLARGY, INC.
22028 VENTURA BLVD #207
WOODLAND HILLS, CA 91364
(818) 347-6096

www.solargy.com

Job Number:

8022503M

Date:

3/28/2008

The EnergyPro computer program has been used to perform the calculations summarized in this compliance report. This program has approval and is authorized by the California Energy Commission for use with both the Residential and Nonresidential 2005 Building Energy Efficiency Standards.

This program developed by EnergySoft, LLC - www.energysoft.com.

TABLE OF CONTENTS

Cover Page	1
Table of Contents	2
Form MECH-1-C Certificate of Compliance	3
Form MECH-2-C Air & Water System Requirements	5
Form MECH-3-C Mechanical Ventilation	10
Form MECH-4-C HVAC Misc. Prescriptive Requirements	12
Form MECH-MM Mechanical Mandatory Measures	26

CERTIFICATE OF COMPLIANCE (Part 1 of 2) MECH-1-C

PROJECT NAME: Industrial Building Alteration (Mechanical)	DATE: 3/28/2008
PROJECT ADDRESS: 12811 Foothill Boulevard Pacoima	Building Permit #
PRINCIPAL DESIGNER - MECHANICAL: Solargy, Inc. Tom Rotchford P.E.	TELEPHONE: (818) 347-6096
DOCUMENTATION AUTHOR: SOLARGY, INC.	TELEPHONE: (818) 347-6096
	Checked by/Date Enforcement Agency Use

GENERAL INFORMATION

DATE OF PLANS	BUILDING CONDITIONED FLOOR AREA: 14,257 Sq.Ft.		CLIMATE ZONE: 9
BUILDING TYPE	[X] NONRESIDENTIAL	[ ] HIGH RISE RESIDENTIAL	[ ] HOTEL/MOTEL GUEST ROOM
PHASE OF CONSTRUCTION	[ ] NEW CONSTRUCTION	[ ] ADDITION [X] ALTERATION	[ ] UNCONDITIONED (File Affidavit)
METHOD OF MECHANICAL COMPLIANCE	[X] PRESCRIPTIVE	[ ] PERFORMANCE	
PROOF OF ENVELOPE COMPLIANCE	[X] PREVIOUS ENVELOPE PERMIT	[ ] ENVELOPE COMPLIANCE ATTACHED	

STATEMENT OF COMPLIANCE

This Certificate of Compliance lists the building features and performance specifications needed to comply with Title 24, Parts 1 and 6 of the California Code of Regulations. This certificate applies only to building mechanical requirements.

The documentation preparer hereby certifies that the documentation is accurate and complete.

DOCUMENTATION AUTHOR	SIGNATURE	DATE 3/28/2008
Solargy, Inc.		

The Principal Mechanical Designer hereby certifies that the proposed building design represented in this set of construction documents is consistent with the other compliance forms and worksheets, with the specifications, and with any other calculations submitted with this permit application. The proposed building has been designed to meet the mechanical requirements contained in the applicable parts of Sections 100, 101, 102, 110 through115, 120 through 125, 142, 144, and 145.

[X] The plans & specifications meet the requirements of Part 1 (Sections 10-103a).

[X] The installation certificates meet the requirements of Part 1 (10-103a 3).

[X] The operation & maintenance information meets the requirements of Part 1 (10-103c).

Please check one: (These sectionsof the Business and Professions Code are printed in full in the Nonresidential Manual.)

[X] I hereby affirm that I am eligible under the provisions of Division 3 of the Business and Professions Code to sign this document as the person responsible for its preparation; and that I am licensed in the State of California as a civil engineer, or mechanical engineer or I am a licensed architect.

[ ] I affirm that I am eligible under the exemption to Division 3 of the Business and Professions Code by Section 5537.2 or 6737.3 to sign this document as the person responsible for its preparation; and that I am a licensed contractor performing this work.

[ ] I affirm that I am eligible under the exemption to Division 3 of the Business and Professions Code to sign this document because it pertains to a structure or type of work described pursuant to Business and Professions Code sections 5537, 5538, and 6737.1.

PRINCIPAL MECHANICAL DESIGNER - NAME	SIGNATURE	DATE 3/28/2008	LIC. #M026278
Solargy, Inc. Tom Rotchford P.E.			

INSTRUCTIONS TO APPLICANT

[X] MECH-1-C: Certificate of Compliance. Part 1, 2, 3 of 3 are required on plans for all submittals.

[X] MECH-2-C: Air/Water/Service/Water Pools Requirements. Part 1 of 3, 2 of 3, 3 of 3 are required for all submittals, but may be on plans.

[X] MECH-3-C: Mechanical Ventilation and Reheat is required for all submittals with mechanical ventilation, but may be on plans.

[X] MECH-4-C: HVAC Misc. Prescriptive Requirements is required for all prescriptive submittals, but may be on plans.

[ ] MECH-5-C: Mechanical Equipment Details are required for all performance submittals.

CERTIFICATE OF COMPLIANCE (Part 2 of 2) MECH-1-C

PROJECT NAME	DATE
Industrial Building Alteration (Mechanical)	3/28/2008

Designer:

This form is to be used by the designer and attached to the plans. Listed below are all the acceptance tests for mechanical systems. The designer is required to check the boxes by all acceptance tests that apply and list all equipment that requires an acceptance test. If all equipment of a certain type requires a test, list the equipment description and the number of systems to be tested in parentheses. The NJ number designates the Section in the Appendix of the Nonresidential ACM Manual that describes the test. Also indicate the person responsible for performing the tests (i.e. the installing contractor, design professional or an agent selected by the owner). Since this form will be part of the plans, completion of this section will allow the responsible party to budget for the scope of work appropriately.

Building Departments:

SYSTEM ACCEPTANCE. Before an occupancy permit is granted for a newly constructed building or space, or a new space-conditioning system serving a building or space is operated for normal use, all control devices serving the building or space shall be certified as meeting the Acceptance Requirements for Code Compliance.

In addition a Certificate of Acceptance, MECH-1-A Form shall be submitted to the building department that certifies plans, specifications, installation certificates, and operating and maintenance information meet the requirements of Section 10-103(b) and Title 24 Part 6.

STATEMENT OF COMPLIANCE	
☒ MECH-2-A: Ventilation System Acceptance Document A-Variable Air Volume Systems Outdoor Air Acceptance B-Constant Air Volume Systems Outdoor Air Acceptance Equipment requiring acceptance testing B; New Packaged Gas /Electric Units *Test required on all New systems both New Construction and Retrofit.*	Contractor
☒ MECH-3-A: Packaged HVAC Systems Acceptance Document Equipment requiring acceptance testing New Packaged Gas /Electric Units *Test required on all New systems both New Construction and Retrofit.*	Contractor
☐ MECH-4-A: Air-Side Economizer Acceptance Document Equipment requiring acceptance testing *Test required on all New systems both New Construction and Retrofit. Units with economizers that are installed at the factory and certified with the commission do not require equipment testing but do require construction inspection.*	
☐ MECH-5-A: Air Distribution Acceptance Document Equipment requiring acceptance testing Not Required; Ducts in Conditioned Space *This test required if the unit serves 5,000 ft2 of space or less and 25% or more of the ducts are in nonconditioned or semiconditioned space like an attic. New systems that meet the above requirements. Retrofit systems that meet the above requirements and either extend ducts, replace ducts or replace the packaged unit.*	
☐ MECH-6-A: Demand Control Ventilation Acceptance Document Equipment requiring acceptance testing *All new DCV controls installed on new or existing packaged systems must be tested.*	
☐ MECH-7-A: Supply Fan Variable Flow Control Acceptance Document Equipment requiring acceptance testing *All new VAV fan volume controls installed on new or existing systems must be tested*	
☐ MECH-8-A: -Hydronic System Control Acceptance Document -Variable Flow Controls *Applies to chilled and hot water systems.* -Automatic Isolation Controls *Applies to new boilers and chillers and the primary pumps are connected to a common header.* -Supply Water Temperature Reset Controls *Applies to new constant flow chilled and hot water systems that have a design capacity greater than or equal to 500,000 Btu/hr.* -Water-loop Heat Pump Controls *Applies to all new waterloop heat pump systems where the combined loop pumps are greater than 5 hp.* -Variable Frequency Controls *Applies to all new distribution pumps on new variable flow chilled, hydronic heat pump or condenser water systems where the pumps motors are greater than 5 hp.* Equipment requiring acceptance testing	

AIR SYSTEM REQUIREMENTS

Part 1 of 2 **MECH-2-C**

PROJECT NAME	DATE
Industrial Building Alteration (Mechanical)	3/28/2008

SYSTEM FEATURES

		AIR SYSTEMS, Central or Single Zone		
ITEM OR SYSTEM TAG(S)		S1	S2	S3
Number of Systems		1	1	1
MANDATORY MEASURES	**T-24 Section**	**Reference on Plans or Specification [1]**		
Heating Equipment Efficiency	112(a)	78% AFUE	78% AFUE	78% AFUE
Cooling Equipment Efficiency	112(a)	9.9 SEER / 8.5 EER	9.9 SEER / 8.5 EER	9.9 SEER / 8.5 EER
Heat Pump Thermostat	112(b)	n/a	n/a	n/a
Furnace Controls	112(c), 115(a)	n/a	n/a	n/a
Natural Ventilation	121(b)	No	No	No
Minimum Ventilation	121(b)	75 cfm	144 cfm	145 cfm
VAV Minimum Position Control	121(c)	No	No	No
Demand Control Ventilation	121(c)	No	No	No
Time Control	121(c), 122(e)	Programmable Switch	Programmable Switch	Programmable Switch
Setback and Setup Control	122(e)	Heating Required	Heating Required	Heating Required
Outdoor Damper Control	122(f)	Auto	Auto	Auto
Isolation Zones	122(g)	n/a	n/a	n/a
Pipe Insulation	123			
Duct Insulation	124	R-0.0	R-0.0	R-0.0
PRESCRIPTIVE MEASURES				
Calculated Heating Capacity x 1.43 [2]	144 (a & b)	21,648 btuh	44,166 btuh	44,270 btuh
Proposed Heating Capacity [2]	144 (a & b)	48,000 btuh	80,000 btuh	80,000 btuh
Calculated Sensible Cooling Capacity x 1.21 [2]	144 (a & b)	31,764 btuh	49,885 btuh	50,085 btuh
Proposed Sensible Cooling Capacity [2]	144 (a & b)	29,433 btuh	49,197 btuh	49,184 btuh
Fan Control	144 (c)	Constant Volume	Constant Volume	Constant Volume
DP Sensor Location	144 (c)			
Supply Pressure Reset (DDC only)	144 (c)	No	No	No
Simultaneous Heat/Cool	144 (d)	No	No	No
Economizer	144 (e)	No Economizer	No Economizer	No Economizer
Heating Air Supply Reset	144 (f)	Constant Temp	Constant Temp	Constant Temp
Cooling Air Supply Reset	144 (f)	Constant Temp	Constant Temp	Constant Temp
Duct Sealing for Prescriptive Compliance [3]	144 (k)	No	No	No

1: For each central and single zone air systems (or group of similar units) fill in the reference to sheet number and/or specification section and paragraph number where the required features are documented. If a requirement is not applicable, put "N/A" in the column.

2: Not required for hydronic heating and cooling. Either enter a value here or put in reference ot plans and specificatons per footnote 1.

3: Enter Yes if System is: Constant Volume, Single Zone; Serves < 5,000 sqft; Has > 25% duct in unconditioned space. Duct sealing is required for Prescriptive Compliance, see PERF-1 for performance method duct sealing requirements.

NOTES TO FIELD - For Building Department Use Only

AIR SYSTEM REQUIREMENTS

Part 1 of 2 **MECH-2-C**

PROJECT NAME: Industrial Building Alteration (Mechanical)

DATE: 3/28/2008

SYSTEM FEATURES

		AIR SYSTEMS, Central or Single Zone		
ITEM OR SYSTEM TAG(S)		S4	S5	S6
Number of Systems		1	1	1
MANDATORY MEASURES	**T-24 Section**	Reference on Plans or Specification [1]		
Heating Equipment Efficiency	112(a)	78% AFUE	78% AFUE	78% AFUE
Cooling Equipment Efficiency	112(a)	9.9 SEER / 8.5 EER	9.9 SEER / 8.5 EER	9.9 SEER / 8.5 EER
Heat Pump Thermostat	112(b)	n/a	n/a	n/a
Furnace Controls	112(c), 115(a)	n/a	n/a	n/a
Natural Ventilation	121(b)	No	No	No
Minimum Ventilation	121(b)	143 cfm	139 cfm	198 cfm
VAV Minimum Position Control	121(c)	No	No	No
Demand Control Ventilation	121(c)	No	No	No
Time Control	121(c), 122(e)	Programmable Switch	Programmable Switch	Programmable Switch
Setback and Setup Control	122(e)	Heating Required	Heating Required	Heating Required
Outdoor Damper Control	122(f)	Auto	Auto	Auto
Isolation Zones	122(g)	n/a	n/a	n/a
Pipe Insulation	123			
Duct Insulation	124	R-0.0	R-0.0	R-0.0
PRESCRIPTIVE MEASURES				
Calculated Heating Capacity x 1.43 [2]	144 (a & b)	61,201 btuh	49,056 btuh	55,908 btuh
Proposed Heating Capacity [2]	144 (a & b)	80,000 btuh	80,000 btuh	80,000 btuh
Calculated Sensible Cooling Capacity x 1.21 [2]	144 (a & b)	55,309 btuh	52,799 btuh	66,486 btuh
Proposed Sensible Cooling Capacity [2]	144 (a & b)	47,946 btuh	47,995 btuh	47,408 btuh
Fan Control	144 (c)	Constant Volume	Constant Volume	Constant Volume
DP Sensor Location	144 (c)			
Supply Pressure Reset (DDC only)	144 (c)	No	No	No
Simultaneous Heat/Cool	144 (d)	No	No	No
Economizer	144 (e)	No Economizer	No Economizer	No Economizer
Heating Air Supply Reset	144 (f)	Constant Temp	Constant Temp	Constant Temp
Cooling Air Supply Reset	144 (f)	Constant Temp	Constant Temp	Constant Temp
Duct Sealing for Prescriptive Compliance [3]	144 (k)	No	No	No

1: For each central and single zone air systems (or group of similar units) fill in the reference to sheet number and/or specification section and paragraph number where the required features are documented. If a requirement is not applicable, put "N/A" in the column.

2: Not required for hydronic heating and cooling. Either enter a value here or put in reference ot plans and specificatons per footnote 1.

3: Enter Yes if System is: Constant Volume, Single Zone; Serves < 5,000 sqft; Has > 25% duct in unconditioned space. Duct sealing is required for Prescriptive Compliance, see PERF-1 for performance method duct sealing requirements.

NOTES TO FIELD - For Building Department Use Only

EnergyPro 4.4 by EnergySoft User Number: 1111 Job Number: 8022503M Page:6 of 27

AIR SYSTEM REQUIREMENTS

Part 1 of 2 **MECH-2-C**

PROJECT NAME	DATE
Industrial Building Alteration (Mechanical)	3/28/2008

SYSTEM FEATURES

		AIR SYSTEMS, Central or Single Zone		
ITEM OR SYSTEM TAG(S)		S7	S8	S9
Number of Systems		1	1	1
MANDATORY MEASURES	**T-24 Section**	**Reference on Plans or Specification [1]**		
Heating Equipment Efficiency	112(a)	78% AFUE	78% AFUE	78% AFUE
Cooling Equipment Efficiency	112(a)	9.9 SEER / 8.5 EER	9.9 SEER / 8.5 EER	9.9 SEER / 8.5 EER
Heat Pump Thermostat	112(b)	n/a	n/a	n/a
Furnace Controls	112(c), 115(a)	n/a	n/a	n/a
Natural Ventilation	121(b)	No	No	No
Minimum Ventilation	121(b)	139 cfm	159 cfm	202 cfm
VAV Minimum Position Control	121(c)	No	No	No
Demand Control Ventilation	121(c)	No	No	No
Time Control	121(c), 122(e)	Programmable Switch	Programmable Switch	Programmable Switch
Setback and Setup Control	122(e)	Heating Required	Heating Required	Heating Required
Outdoor Damper Control	122(f)	Auto	Auto	Auto
Isolation Zones	122(g)	n/a	n/a	n/a
Pipe Insulation	123			
Duct Insulation	124	R-0.0	R-0.0	R-0.0

PRESCRIPTIVE MEASURES

Calculated Heating Capacity x 1.43 [2]	144 (a & b)	69,741 btuh	57,170 btuh	27,343 btuh
Proposed Heating Capacity [2]	144 (a & b)	80,000 btuh	80,000 btuh	80,000 btuh
Calculated Sensible Cooling Capacity x 1.21 [2]	144 (a & b)	67,961 btuh	66,992 btuh	56,385 btuh
Proposed Sensible Cooling Capacity [2]	144 (a & b)	47,995 btuh	48,106 btuh	47,515 btuh
Fan Control	144 (c)	Constant Volume	Constant Volume	Constant Volume
DP Sensor Location	144 (c)			
Supply Pressure Reset (DDC only)	144 (c)	No	No	No
Simultaneous Heat/Cool	144 (d)	No	No	No
Economizer	144 (e)	No Economizer	No Economizer	No Economizer
Heating Air Supply Reset	144 (f)	Constant Temp	Constant Temp	Constant Temp
Cooling Air Supply Reset	144 (f)	Constant Temp	Constant Temp	Constant Temp
Duct Sealing for Prescriptive Compliance [3]	144 (k)	No	No	No

1: For each central and single zone air systems (or group of similar units) fill in the reference to sheet number and/or specification section and paragraph number where the required features are documented. If a requirement is not applicable, put "N/A" in the column.

2: Not required for hydronic heating and cooling. Either enter a value here or put in reference ot plans and specificatons per footnote 1.

3: Enter Yes if System is: Constant Volume, Single Zone; Serves < 5,000 sqft; Has > 25% duct in unconditioned space. Duct sealing is required for Prescriptive Compliance, see PERF-1 for performance method duct sealing requirements.

NOTES TO FIELD - For Building Department Use Only

AIR SYSTEM REQUIREMENTS

Part 1 of 2 **MECH-2-C**

PROJECT NAME: Industrial Building Alteration (Mechanical)

DATE: 3/28/2008

SYSTEM FEATURES

		AIR SYSTEMS, Central or Single Zone		
ITEM OR SYSTEM TAG(S)		S10	S11	S12
Number of Systems		1	1	1
MANDATORY MEASURES	**T-24 Section**	**Reference on Plans or Specification [1]**		
Heating Equipment Efficiency	112(a)	78% AFUE	78% AFUE	78% AFUE
Cooling Equipment Efficiency	112(a)	9.9 SEER / 8.5 EER	9.9 SEER / 8.5 EER	9.9 SEER / 8.5 EER
Heat Pump Thermostat	112(b)	n/a	n/a	n/a
Furnace Controls	112(c), 115(a)	n/a	n/a	n/a
Natural Ventilation	121(b)	No	No	No
Minimum Ventilation	121(b)	152 cfm	152 cfm	152 cfm
VAV Minimum Position Control	121(c)	No	No	No
Demand Control Ventilation	121(c)	No	No	No
Time Control	121(c), 122(e)	Programmable Switch	Programmable Switch	Programmable Switch
Setback and Setup Control	122(e)	Heating Required	Heating Required	Heating Required
Outdoor Damper Control	122(f)	Auto	Auto	Auto
Isolation Zones	122(g)	n/a	n/a	n/a
Pipe Insulation	123			
Duct Insulation	124	R-0.0	R-0.0	R-0.0
PRESCRIPTIVE MEASURES				
Calculated Heating Capacity x 1.43 [2]	144 (a & b)	21,509 btuh	21,509 btuh	21,612 btuh
Proposed Heating Capacity [2]	144 (a & b)	80,000 btuh	80,000 btuh	80,000 btuh
Calculated Sensible Cooling Capacity x 1.21 [2]	144 (a & b)	49,875 btuh	51,960 btuh	52,191 btuh
Proposed Sensible Cooling Capacity [2]	144 (a & b)	47,855 btuh	47,855 btuh	47,846 btuh
Fan Control	144 (c)	Constant Volume	Constant Volume	Constant Volume
DP Sensor Location	144 (c)			
Supply Pressure Reset (DDC only)	144 (c)	No	No	No
Simultaneous Heat/Cool	144 (d)	No	No	No
Economizer	144 (e)	No Economizer	No Economizer	No Economizer
Heating Air Supply Reset	144 (f)	Constant Temp	Constant Temp	Constant Temp
Cooling Air Supply Reset	144 (f)	Constant Temp	Constant Temp	Constant Temp
Duct Sealing for Prescriptive Compliance [3]	144 (k)	No	No	No

1: For each central and single zone air systems (or group of similar units) fill in the reference to sheet number and/or specification section and paragraph number where the required features are documented. If a requirement is not applicable, put "N/A" in the column.

2: Not required for hydronic heating and cooling. Either enter a value here or put in reference of plans and specificatons per footnote 1.

3: Enter Yes if System is: Constant Volume, Single Zone; Serves < 5,000 sqft; Has > 25% duct in unconditioned space. Duct sealing is required for Prescriptive Compliance, see PERF-1 for performance method duct sealing requirements.

NOTES TO FIELD - For Building Department Use Only

AIR SYSTEM REQUIREMENTS

Part 1 of 2 **MECH-2-C**

PROJECT NAME	DATE
Industrial Building Alteration (Mechanical)	3/28/2008

SYSTEM FEATURES

	AIR SYSTEMS, Central or Single Zone		
ITEM OR SYSTEM TAG(S)	S13	S14	
Number of Systems	1	1	

MANDATORY MEASURES	T-24 Section	Reference on Plans or Specification [1]		
Heating Equipment Efficiency	112(a)	78% AFUE	78% AFUE	
Cooling Equipment Efficiency	112(a)	9.9 SEER / 8.5 EER	9.9 SEER / 8.5 EER	
Heat Pump Thermostat	112(b)	n/a	n/a	
Furnace Controls	112(c), 115(a)	n/a	n/a	
Natural Ventilation	121(b)	No	No	
Minimum Ventilation	121(b)	152 cfm	186 cfm	
VAV Minimum Position Control	121(c)	No	No	
Demand Control Ventilation	121(c)	No	No	
Time Control	121(c), 122(e)	Programmable Switch	Programmable Switch	
Setback and Setup Control	122(e)	Heating Required	Heating Required	
Outdoor Damper Control	122(f)	Auto	Auto	
Isolation Zones	122(g)	n/a	n/a	
Pipe Insulation	123			
Duct Insulation	124	R-0.0	R-0.0	

PRESCRIPTIVE MEASURES				
Calculated Heating Capacity x 1.43 [2]	144 (a & b)	21,509 btuh	25,513 btuh	
Proposed Heating Capacity [2]	144 (a & b)	80,000 btuh	80,000 btuh	
Calculated Sensible Cooling Capacity x 1.21 [2]	144 (a & b)	51,960 btuh	55,545 btuh	
Proposed Sensible Cooling Capacity [2]	144 (a & b)	47,855 btuh	47,658 btuh	
Fan Control	144 (c)	Constant Volume	Constant Volume	
DP Sensor Location	144 (c)			
Supply Pressure Reset (DDC only)	144 (c)	No	No	
Simultaneous Heat/Cool	144 (d)	No	No	
Economizer	144 (e)	No Economizer	No Economizer	
Heating Air Supply Reset	144 (f)	Constant Temp	Constant Temp	
Cooling Air Supply Reset	144 (f)	Constant Temp	Constant Temp	
Duct Sealing for Prescriptive Compliance [3]	144 (k)	No	No	

1: For each central and single zone air systems (or group of similar units) fill in the reference to sheet number and/or specification section and paragraph number where the required features are documented. If a requirement is not applicable, put "N/A" in the column.

2: Not required for hydronic heating and cooling. Either enter a value here or put in reference of plans and specificatons per footnote 1.

3: Enter Yes if System is: Constant Volume, Single Zone; Serves < 5,000 sqft; Has > 25% duct in unconditioned space. Duct sealing is required for Prescriptive Compliance, see PERF-1 for performance method duct sealing requirements.

NOTES TO FIELD - For Building Department Use Only

MECHANICAL VENTILATION MECH-3-C

PROJECT NAME
Industrial Building Alteration (Mechanical)

DATE
3/28/2008

MECHANICAL VENTILATION (Section 121(b)2)

PRESCRIPTIVE REHEAT LIMITATION (Section 144(d))

	AREA BASIS			OCCUPANCY BASIS			VAV MINIMUM						
A	B	C	D	E	F	G	H	I	J	K	L	M	N
ZONE/SYSTEM	Condition Area (SF)	Square Foot per CFM	Min CFM by Area (B x C)	Number of People	CFM per Person	Min CFM by Occupant (E x F)	REQ'D V.A Max of (D or G)	Design Vent. Air CFM	30% of Design Zone Supply CFM	B x 0.4 CFM/sq. ft.	Max of Columns H, J, K or 300 CFM	Design Min. Air Setpoint	Transfer Air
Z1	502	0.15	75				75	75					
S1						Total	75	75					
Z2	961	0.15	144				144	144					
S2						Total	144	144					
Z3	967	0.15	145				145	145					
S3						Total	145	145					
Z4	955	0.15	143				143	143					
S4						Total	143	143					
Z5	926	0.15	139				139	139					
S5						Total	139	139					
Z6	1,323	0.15	198				198	198					
S6						Total	198	198					
Z7	926	0.15	139				139	139					
S7						Total	139	139					
Z8	1,061	0.15	159				159	159					
S8						Total	159	159					
Z9	1,348	0.15	202				202	202					
S9						Total	202	202					
Z10	1,010	0.15	152				152	152					
S10						Total	152	152					
Z11	1,010	0.15	152				152	152					
S11						Total	152	152					
Z12	1,016	0.15	152				152	152					
S12						Total	152	152					
Z13	1,010	0.15	152				152	152					

C	Minimum ventilation rate per Section 121, Table 121-A
E	Based on fixed seat or the greater of the expected number of occupants and 50% of the CBC occupant load for egress purposes for spaces without fixed seating.
H	Required Ventilation Air (REQ'D V.A.) is the larger of the ventilation rates calculated on and AREA or OCCUPANCY BASIS (column D or G).
I	Must be greater than or equal to H, or use Transfer Air (column N) to make up the difference.
J	Design fan supply cfm (Fan CFM) x 30%; or
K	Condition area (ft. sq.) x 04 cfm/ft. sq.; or
L	Maximum of Columns H, J, K, or 300 cfm
M	This must be less than or equal to Column L and greater that or equal to the sum of Columns H + N.
N	Transfer air must be provided where the Required Ventilation Air (column I) is greater than the Design Minimum Air (column M). Where required, transfer air must be greater than or equal to the difference between the Required Ventilation Air (column I) and the Design Minimum Air (column M), column H - M.

MECHANICAL VENTILATION MECH-3-C

PROJECT NAME: Industrial Building Alteration (Mechanical)

DATE: 3/28/2008

MECHANICAL VENTILATION (Section 121(b)2)

	AREA BASIS			OCCUPANCY BASIS					PRESCRIPTIVE REHEAT LIMITATION (Section 144(d)) VAV MINIMUM				
A	B	C	D	E	F	G	H	I	J	K	L	M	N
ZONE/SYSTEM	Condition Area (SF)	CFM per Square Foot	Min CFM by Area (B x C)	Number of People	CFM per Person	Min CFM by Occupant (E x F)	REQ'D V.A Max of (D or G)	Design Vent. Air CFM	30% of Design Zone Supply CFM	B x 0.4 CFM/sq. ft.	Max of Columns H, J, K or 300 CFM	Design Min. Air Setpoint	Transfer Air
S13						Total	152	152					
Z14	1,242	0.15	186				186	186					
S14						Total	186	186					

C	Minimum ventilation rate per Section 121, Table 121-A
E	Based on fixed seat or the greater of the expected number of occupants and 50% of the CBC occupant load for egress purposes for spaces without fixed seating.
H	Required Ventilation Air (REQ'D V.A.) is the larger of the ventilation rates calculated on and AREA or OCCUPANCY BASIS (column D or G).
I	Must be greater than or equal to H, or use Transfer Air (column N) to make up the difference.
J	Design fan supply cfm (Fan CFM) x 30%; or
K	Condition area (ft. sq.) x 04 cfm/ft. sq.; or
L	Maximum of Columns H, J, K, or 300 cfm
M	This must be less than or equal to Column L and greater that or equal to the sum of Columns H + N.
N	Transfer air must be provided where the Required Ventilation Air (column I) is greater than the Design Minimum Air (column M). Where required, transfer air must be greater than or equal to the difference between the Required Ventilation Air (column I) and the Design Minimum Air (column M), column H - M.

MECHANICAL SIZING AND FAN POWER MECH-4-C

PROJECT NAME: Industrial Building Alteration (Mechanical)
DATE: 3/28/2008
SYSTEM NAME: S1
FLOOR AREA: 502

FAN POWER CONSUMPTION

A	B	C	D	E	F
FAN DESCRIPTION	DESIGN BRAKE HP	EFFICIENCY MOTOR	EFFICIENCY DRIVE	NUMBER OF FANS	PEAK WATTS B x E x 746 / (C X D)
Supply Fan	0.500	76.0%	100.0%	1.0	491

FILTER PRESSURE ADJUSTMENT EQUATION 144-A

A) If filter pressure drop is greater than 1 inch W.C. enter filter pressure drop. SPa on line 4 and Total Fan pressure SPf on Line 5.

B) Calculate Fan Adjustment and enter on Line 6.

C) Calculate Adjusted Fan Power Index and enter on Line 7.

Total Adjustments	
1) TOTAL FAN SYSTEM POWER (Watts, Sum Column F)	491
2) SUPPLY DESIGN AIRFLOW (CFM)	1,200
3) TOTAL FAN SYSTEM POWER INDEX (Row 1/Row 2)[1]	
4) SPa	
5) SPf	
6) Fan Adjustment = 1-(SPa - 1)/SPf	
7) ADJUSTED FAN POWER INDEX (Line 3 x Line 6)[1]	0.409

1. TOTAL FAN SYSTEM POWER INDEX or ADJUSTED FAN POWER INDEX must not exceed 0.8 W/cfm for Constant Volume systems or 1.25 W/cfm for VAV systems.

ITEM or SYSTEM TAG(S)

PRESCRIPTIVE MEASURES	T-24 Section	Capacity	Exception	Notes
Electric Resistance Heating [1]	144 (g)			
Heat Rejection System [2]	144 (h)			
Air Cooled Chiller Limitation [3]	144 (i)			

1 Total installed capacity (MBtu/hr) of all electric heat on this project exclusive of electric auxiliary heat for heat pumps. If electric heat is used, explain which exception(s) to Section(g) apply.

2. Are centrifugal fan cooling towers used on this project? (Enter "Yes" or "No") If centrifugal fan cooling tower are used, explain which exception(s) to Section 144(h) apply.

3. Total installed capacity (tons) of all water and air cooled chillers under this permit. If there are more than 100 tons of air-cooled chiller capacity being installed, explain which exception(s) to Section 144(i) apply.

MECHANICAL SIZING AND FAN POWER — MECH-4-C

PROJECT NAME: Industrial Building Alteration (Mechanical)	DATE: 3/28/2008
SYSTEM NAME: S2	FLOOR AREA: 961

FAN POWER CONSUMPTION

A	B	C	D	E	F
FAN DESCRIPTION	DESIGN BRAKE HP	EFFICIENCY MOTOR	EFFICIENCY DRIVE	NUMBER OF FANS	PEAK WATTS B x E x 746 / (C X D)
Supply Fan	1.000	82.5%	100.0%	1.0	904

FILTER PRESSURE ADJUSTMENT EQUATION 144-A

A) If filter pressure drop is greater than 1 inch W.C. enter filter pressure drop. SPa on line 4 and Total Fan pressure SPf on Line 5.

B) Calculate Fan Adjustment and enter on Line 6.

C) Calculate Adjusted Fan Power Index and enter on Line 7.

Total Adjustments	
1) TOTAL FAN SYSTEM POWER (Watts, Sum Column F)	904
2) SUPPLY DESIGN AIRFLOW (CFM)	2,000
3) TOTAL FAN SYSTEM POWER INDEX (Row 1/Row 2)[1]	
4) SPa	
5) SPf	
6) Fan Adjustment = 1-(SPa - 1)/SPf	
7) ADJUSTED FAN POWER INDEX (Line 3 x Line 6)[1]	0.452

1. TOTAL FAN SYSTEM POWER INDEX or ADJUSTED FAN POWER INDEX must not exceed 0.8 W/cfm for Constant Volume systems or 1.25 W/cfm for VAV systems.

ITEM or SYSTEM TAG(S)

PRESCRIPTIVE MEASURES	T-24 Section	Capacity	Exception	Notes
Electric Resistance Heating [1]	144 (g)			
Heat Rejection System [2]	144 (h)			
Air Cooled Chiller Limitation [3]	144 (i)			

1. Total installed capacity (MBtu/hr) of all electric heat on this project exclusive of electric auxiliary heat for heat pumps. If electric heat is used, explain which exception(s) to Section(g) apply.
2. Are centrifugal fan cooling towers used on this project? (Enter "Yes" or "No") If centrifugal fan cooling tower are used, explain which exception(s) to Section 144(h) apply.
3. Total installed capacity (tons) of all water and air cooled chillers under this permit. If there are more than 100 tons of air-cooled chiller capacity being installed, explain which exception(s) to Section 144(i) apply.

MECHANICAL SIZING AND FAN POWER — MECH-4-C

PROJECT NAME: Industrial Building Alteration (Mechanical)
DATE: 3/28/2008
SYSTEM NAME: S3
FLOOR AREA: 967

FAN POWER CONSUMPTION

A	B	C	D	E	F
FAN DESCRIPTION	DESIGN BRAKE HP	EFFICIENCY MOTOR	EFFICIENCY DRIVE	NUMBER OF FANS	PEAK WATTS B x E x 746 / (C X D)
Supply Fan	1.000	82.5%	100.0%	1.0	904

FILTER PRESSURE ADJUSTMENT EQUATION 144-A

A) If filter pressure drop is greater than 1 inch W.C. enter filter pressure drop. SPa on line 4 and Total Fan pressure SPf on Line 5.

B) Calculate Fan Adjustment and enter on Line 6.

C) Calculate Adjusted Fan Power Index and enter on Line 7.

Total Adjustments	
1) TOTAL FAN SYSTEM POWER (Watts, Sum Column F)	904
2) SUPPLY DESIGN AIRFLOW (CFM)	2,000
3) TOTAL FAN SYSTEM POWER INDEX (Row 1/Row 2)[1]	
4) SPa	
5) SPf	
6) Fan Adjustment = 1-(SPa - 1)/SPf	
7) ADJUSTED FAN POWER INDEX (Line 3 x Line 6)[1]	0.452

1. TOTAL FAN SYSTEM POWER INDEX or ADJUSTED FAN POWER INDEX must not exceed 0.8 W/cfm for Constant Volume systems or 1.25 W/cfm for VAV systems.

ITEM or SYSTEM TAG(S)

PRESCRIPTIVE MEASURES	T-24 Section	Capacity	Exception	Notes
Electric Resistance Heating [1]	144 (g)			
Heat Rejection System [2]	144 (h)			
Air Cooled Chiller Limitation [3]	144 (i)			

1. Total installed capacity (MBtu/hr) of all electric heat on this project exclusive of electric auxiliary heat for heat pumps. If electric heat is used, explain which exception(s) to Section(g) apply.
2. Are centrifugal fan cooling towers used on this project? (Enter "Yes" or "No") If centrifugal fan cooling tower are used, explain which exception(s) to Section 144(h) apply.
3. Total installed capacity (tons) of all water and air cooled chillers under this permit. If there are more than 100 tons of air-cooled chiller capacity being installed, explain which exception(s) to Section 144(i) apply.

MECHANICAL SIZING AND FAN POWER — MECH-4-C

PROJECT NAME: Industrial Building Alteration (Mechanical)	DATE: 3/28/2008
SYSTEM NAME: S4	FLOOR AREA: 955

FAN POWER CONSUMPTION

A	B	C	D	E	F
FAN DESCRIPTION	DESIGN BRAKE HP	EFFICIENCY MOTOR	EFFICIENCY DRIVE	NUMBER OF FANS	PEAK WATTS B x E x 746 / (C X D)
Supply Fan	1.000	82.5%	100.0%	1.0	904

FILTER PRESSURE ADJUSTMENT EQUATION 144-A

A) If filter pressure drop is greater than 1 inch W.C. enter filter pressure drop, SPa on line 4 and Total Fan pressure SPf on Line 5.

B) Calculate Fan Adjustment and enter on Line 6.

C) Calculate Adjusted Fan Power Index and enter on Line 7.

Total Adjustments	
1) TOTAL FAN SYSTEM POWER (Watts, Sum Column F)	904
2) SUPPLY DESIGN AIRFLOW (CFM)	2,000
3) TOTAL FAN SYSTEM POWER INDEX (Row 1/Row 2)[1]	
4) SPa	
5) SPf	
6) Fan Adjustment = 1-(SPa - 1)/SPf	
7) ADJUSTED FAN POWER INDEX (Line 3 x Line 6)[1]	0.452

1. TOTAL FAN SYSTEM POWER INDEX or ADJUSTED FAN POWER INDEX must not exceed 0.8 W/cfm for Constant Volume systems or 1.25 W/cfm for VAV systems.

ITEM or SYSTEM TAG(S)

PRESCRIPTIVE MEASURES	T-24 Section	Capacity	Exception	Notes
Electric Resistance Heating [1]	144 (g)			
Heat Rejection System [2]	144 (h)			
Air Cooled Chiller Limitation [3]	144 (i)			

1. Total installed capacity (MBtu/hr) of all electric heat on this project exclusive of electric auxiliary heat for heat pumps. If electric heat is used, explain which exception(s) to Section(g) apply.

2. Are centrifugal fan cooling towers used on this project? (Enter "Yes" or "No") If centrifugal fan cooling tower are used, explain which exception(s) to Section 144(h) apply.

3. Total installed capacity (tons) of all water and air cooled chillers under this permit. If there are more than 100 tons of air-cooled chiller capacity being installed, explain which exception(s) to Section 144(i) apply.

MECHANICAL SIZING AND FAN POWER MECH-4-C

PROJECT NAME: Industrial Building Alteration (Mechanical)
DATE: 3/28/2008
SYSTEM NAME: S5
FLOOR AREA: 926

FAN POWER CONSUMPTION

A	B	C	D	E	F
FAN DESCRIPTION	DESIGN BRAKE HP	EFFICIENCY MOTOR	EFFICIENCY DRIVE	NUMBER OF FANS	PEAK WATTS B x E x 746 / (C X D)
Supply Fan	1.000	82.5%	100.0%	1.0	904

FILTER PRESSURE ADJUSTMENT EQUATION 144-A

A) If filter pressure drop is greater than 1 inch W.C. enter filter pressure drop. SPa on line 4 and Total Fan pressure SPf on Line 5.

B) Calculate Fan Adjustment and enter on Line 6.

C) Calculate Adjusted Fan Power Index and enter on Line 7.

Total Adjustments	
1) TOTAL FAN SYSTEM POWER (Watts, Sum Column F)	904
2) SUPPLY DESIGN AIRFLOW (CFM)	2,000
3) TOTAL FAN SYSTEM POWER INDEX (Row 1/Row 2)[1]	
4) SPa	
5) SPf	
6) Fan Adjustment = 1-(SPa - 1)/SPf	
7) ADJUSTED FAN POWER INDEX (Line 3 x Line 6)[1]	0.452

1. TOTAL FAN SYSTEM POWER INDEX or ADJUSTED FAN POWER INDEX must not exceed 0.8 W/cfm for Constant Volume systems or 1.25 W/cfm for VAV systems.

ITEM or SYSTEM TAG(S)

PRESCRIPTIVE MEASURES	T-24 Section	Capacity	Exception	Notes
Electric Resistance Heating [1]	144 (g)			
Heat Rejection System [2]	144 (h)			
Air Cooled Chiller Limitation [3]	144 (i)			

1. Total installed capacity (MBtu/hr) of all electric heat on this project exclusive of electric auxiliary heat for heat pumps. If electric heat is used, explain which exception(s) to Section(g) apply.
2. Are centrifugal fan cooling towers used on this project? (Enter "Yes" or "No") If centrifugal fan cooling tower are used, explain which exception(s) to Section 144(h) apply.
3. Total installed capacity (tons) of all water and air cooled chillers under this permit. If there are more than 100 tons of air-cooled chiller capacity being installed, explain which exception(s) to Section 144(i) apply.

MECHANICAL SIZING AND FAN POWER — MECH-4-C

PROJECT NAME: Industrial Building Alteration (Mechanical)	DATE: 3/28/2008
SYSTEM NAME: S6	FLOOR AREA: 1,323

FAN POWER CONSUMPTION

A	B	C	D	E	F
FAN DESCRIPTION	DESIGN BRAKE HP	EFFICIENCY MOTOR	EFFICIENCY DRIVE	NUMBER OF FANS	PEAK WATTS B x E x 746 / (C X D)
Supply Fan	1.000	82.5%	100.0%	1.0	904

FILTER PRESSURE ADJUSTMENT EQUATION 144-A

A) If filter pressure drop is greater than 1 inch W.C. enter filter pressure drop, SPa on line 4 and Total Fan pressure SPf on Line 5.

B) Calculate Fan Adjustment and enter on Line 6.

C) Calculate Adjusted Fan Power Index and enter on Line 7.

Total Adjustments	
1) TOTAL FAN SYSTEM POWER (Watts, Sum Column F)	904
2) SUPPLY DESIGN AIRFLOW (CFM)	2,000
3) TOTAL FAN SYSTEM POWER INDEX (Row 1/Row 2)[1]	
4) SPa	
5) SPf	
6) Fan Adjustment = 1-(SPa - 1)/SPf	
7) ADJUSTED FAN POWER INDEX (Line 3 x Line 6)[1]	0.452

1. TOTAL FAN SYSTEM POWER INDEX or ADJUSTED FAN POWER INDEX must not exceed 0.8 W/cfm for Constant Volume systems or 1.25 W/cfm for VAV systems.

ITEM or SYSTEM TAG(S)

PRESCRIPTIVE MEASURES	T-24 Section	Capacity	Exception	Notes
Electric Resistance Heating [1]	144 (g)			
Heat Rejection System [2]	144 (h)			
Air Cooled Chiller Limitation [3]	144 (i)			

1. Total installed capacity (MBtu/hr) of all electric heat on this project exclusive of electric auxiliary heat for heat pumps. If electric heat is used, explain which exception(s) to Section(g) apply.
2. Are centrifugal fan cooling towers used on this project? (Enter "Yes" or "No") If centrifugal fan cooling tower are used, explain which exception(s) to Section 144(h) apply.
3. Total installed capacity (tons) of all water and air cooled chillers under this permit. If there are more than 100 tons of air-cooled chiller capacity being installed, explain which exception(s) to Section 144(i) apply.

MECHANICAL SIZING AND FAN POWER MECH-4-C

PROJECT NAME: Industrial Building Alteration (Mechanical)
DATE: 3/28/2008
SYSTEM NAME: S7
FLOOR AREA: 926

FAN POWER CONSUMPTION

A	B	C	D	E	F
FAN DESCRIPTION	DESIGN BRAKE HP	EFFICIENCY MOTOR	EFFICIENCY DRIVE	NUMBER OF FANS	PEAK WATTS B x E x 746 / (C X D)
Supply Fan	1.000	82.5%	100.0%	1.0	904

FILTER PRESSURE ADJUSTMENT EQUATION 144-A

A) If filter pressure drop is greater than 1 inch W.C. enter filter pressure drop. SPa on line 4 and Total Fan pressure SPf on Line 5.

B) Calculate Fan Adjustment and enter on Line 6.

C) Calculate Adjusted Fan Power Index and enter on Line 7.

Total Adjustments	
1) TOTAL FAN SYSTEM POWER (Watts, Sum Column F)	904
2) SUPPLY DESIGN AIRFLOW (CFM)	2,000
3) TOTAL FAN SYSTEM POWER INDEX (Row 1/Row 2)[1]	
4) SPa	
5) SPf	
6) Fan Adjustment = 1-(SPa - 1)/SPf	
7) ADJUSTED FAN POWER INDEX (Line 3 x Line 6)[1]	0.452

1. TOTAL FAN SYSTEM POWER INDEX or ADJUSTED FAN POWER INDEX must not exceed 0.8 W/cfm for Constant Volume systems or 1.25 W/cfm for VAV systems.

ITEM or SYSTEM TAG(S)

PRESCRIPTIVE MEASURES	T-24 Section	Capacity	Exception	Notes
Electric Resistance Heating [1]	144 (g)			
Heat Rejection System [2]	144 (h)			
Air Cooled Chiller Limitation [3]	144 (i)			

1. Total installed capacity (MBtu/hr) of all electric heat on this project exclusive of electric auxiliary heat for heat pumps. If electric heat is used, explain which exception(s) to Section(g) apply.
2. Are centrifugal fan cooling towers used on this project? (Enter "Yes" or "No") If centrifugal fan cooling tower are used, explain which exception(s) to Section 144(h) apply.
3. Total installed capacity (tons) of all water and air cooled chillers under this permit. If there are more than 100 tons of air-cooled chiller capacity being installed, explain which exception(s) to Section 144(i) apply.

MECHANICAL SIZING AND FAN POWER — MECH-4-C

PROJECT NAME: Industrial Building Alteration (Mechanical)	DATE: 3/28/2008
SYSTEM NAME: S8	FLOOR AREA: 1,061

FAN POWER CONSUMPTION

A	B	C	D	E	F
FAN DESCRIPTION	DESIGN BRAKE HP	EFFICIENCY MOTOR	EFFICIENCY DRIVE	NUMBER OF FANS	PEAK WATTS B x E x 746 / (C X D)
Supply Fan	1.000	82.5%	100.0%	1.0	904

FILTER PRESSURE ADJUSTMENT EQUATION 144-A

A) If filter pressure drop is greater than 1 inch W.C. enter filter pressure drop. SPa on line 4 and Total Fan pressure SPf on Line 5.

B) Calculate Fan Adjustment and enter on Line 6.

C) Calculate Adjusted Fan Power Index and enter on Line 7.

Total Adjustments	
1) TOTAL FAN SYSTEM POWER (Watts, Sum Column F)	904
2) SUPPLY DESIGN AIRFLOW (CFM)	2,000
3) TOTAL FAN SYSTEM POWER INDEX (Row 1/Row 2)[1]	
4) SPa	
5) SPf	
6) Fan Adjustment = 1-(SPa - 1)/SPf	
7) ADJUSTED FAN POWER INDEX (Line 3 x Line 6)[1]	0.452

1. TOTAL FAN SYSTEM POWER INDEX or ADJUSTED FAN POWER INDEX must not exceed 0.8 W/cfm for Constant Volume systems or 1.25 W/cfm for VAV systems.

ITEM or SYSTEM TAG(S)

PRESCRIPTIVE MEASURES	T-24 Section	Capacity	Exception	Notes
Electric Resistance Heating [1]	144 (g)			
Heat Rejection System [2]	144 (h)			
Air Cooled Chiller Limitation [3]	144 (i)			

1. Total installed capacity (MBtu/hr) of all electric heat on this project exclusive of electric auxiliary heat for heat pumps. If electric heat is used, explain which exception(s) to Section(g) apply.
2. Are centrifugal fan cooling towers used on this project? (Enter "Yes" or "No") If centrifugal fan cooling tower are used, explain which exception(s) to Section 144(h) apply.
3. Total installed capacity (tons) of all water and air cooled chillers under this permit. If there are more than 100 tons of air-cooled chiller capacity being installed, explain which exception(s) to Section 144(i) apply.

MECHANICAL SIZING AND FAN POWER MECH-4-C

PROJECT NAME: Industrial Building Alteration (Mechanical)
DATE: 3/28/2008
SYSTEM NAME: S9
FLOOR AREA: 1,348

FAN POWER CONSUMPTION

A	B	C	D	E	F
FAN DESCRIPTION	DESIGN BRAKE HP	EFFICIENCY MOTOR	EFFICIENCY DRIVE	NUMBER OF FANS	PEAK WATTS B x E x 746 / (C X D)
Supply Fan	1.000	82.5%	100.0%	1.0	904

FILTER PRESSURE ADJUSTMENT EQUATION 144-A

A) If filter pressure drop is greater than 1 inch W.C. enter filter pressure drop. SPa on line 4 and Total Fan pressure SPf on Line 5.

B) Calculate Fan Adjustment and enter on Line 6.

C) Calculate Adjusted Fan Power Index and enter on Line 7.

Total Adjustments	
1) TOTAL FAN SYSTEM POWER (Watts, Sum Column F)	904
2) SUPPLY DESIGN AIRFLOW (CFM)	2,000
3) TOTAL FAN SYSTEM POWER INDEX (Row 1/Row 2)[1]	
4) SPa	
5) SPf	
6) Fan Adjustment = 1-(SPa - 1)/SPf	
7) ADJUSTED FAN POWER INDEX (Line 3 x Line 6)[1]	0.452

1. TOTAL FAN SYSTEM POWER INDEX or ADJUSTED FAN POWER INDEX must not exceed 0.8 W/cfm for Constant Volume systems or 1.25 W/cfm for VAV systems.

ITEM or SYSTEM TAG(S)

PRESCRIPTIVE MEASURES	T-24 Section	Capacity	Exception	Notes
Electric Resistance Heating [1]	144 (g)			
Heat Rejection System [2]	144 (h)			
Air Cooled Chiller Limitation [3]	144 (i)			

1 Total installed capacity (MBtu/hr) of all electric heat on this project exclusive of electric auxiliary heat for heat pumps. If electric heat is used, explain which exception(s) to Section(g) apply.

2. Are centrifugal fan cooling towers used on this project? (Enter "Yes" or "No") If centrifugal fan cooling tower are used, explain which exception(s) to Section 144(h) apply.

3. Total installed capacity (tons) of all water and air cooled chillers under this permit. If there are more than 100 tons of air-cooled chiller capacity being installed, explain which exception(s) to Section 144(i) apply.

MECHANICAL SIZING AND FAN POWER — MECH-4-C

PROJECT NAME: Industrial Building Alteration (Mechanical)	DATE: 3/28/2008
SYSTEM NAME: S10	FLOOR AREA: 1,010

FAN POWER CONSUMPTION

A	B	C	D	E	F
FAN DESCRIPTION	DESIGN BRAKE HP	EFFICIENCY MOTOR	EFFICIENCY DRIVE	NUMBER OF FANS	PEAK WATTS B x E x 746 / (C X D)
Supply Fan	1.000	82.5%	100.0%	1.0	904

FILTER PRESSURE ADJUSTMENT EQUATION 144-A

A) If filter pressure drop is greater than 1 inch W.C. enter filter pressure drop. SPa on line 4 and Total Fan pressure SPf on Line 5.

B) Calculate Fan Adjustment and enter on Line 6.

C) Calculate Adjusted Fan Power Index and enter on Line 7.

Total Adjustments	
1) TOTAL FAN SYSTEM POWER (Watts, Sum Column F)	904
2) SUPPLY DESIGN AIRFLOW (CFM)	2,000
3) TOTAL FAN SYSTEM POWER INDEX (Row 1/Row 2)[1]	
4) SPa	
5) SPf	
6) Fan Adjustment = 1-(SPa - 1)/SPf	
7) ADJUSTED FAN POWER INDEX (Line 3 x Line 6)[1]	0.452

1. TOTAL FAN SYSTEM POWER INDEX or ADJUSTED FAN POWER INDEX must not exceed 0.6 W/cfm for Constant Volume systems or 1.25 W/cfm for VAV systems.

ITEM or SYSTEM TAG(S)

PRESCRIPTIVE MEASURES	T-24 Section	Capacity	Exception	Notes
Electric Resistance Heating [1]	144 (g)			
Heat Rejection System [2]	144 (h)			
Air Cooled Chiller Limitation [3]	144 (i)			

1. Total installed capacity (MBtu/hr) of all electric heat on this project exclusive of electric auxiliary heat for heat pumps. If electric heat is used, explain which exception(s) to Section(g) apply.
2. Are centrifugal fan cooling towers used on this project? (Enter "Yes" or "No") If centrifugal fan cooling tower are used, explain which exception(s) to Section 144(h) apply.
3. Total installed capacity (tons) of all water and air cooled chillers under this permit. If there are more than 100 tons of air-cooled chiller capacity being installed, explain which exception(s) to Section 144(i) apply.

MECHANICAL SIZING AND FAN POWER — MECH-4-C

PROJECT NAME: Industrial Building Alteration (Mechanical)
DATE: 3/28/2008
SYSTEM NAME: S11
FLOOR AREA: 1,010

FAN POWER CONSUMPTION

A	B	C	D	E	F
FAN DESCRIPTION	DESIGN BRAKE HP	EFFICIENCY MOTOR	EFFICIENCY DRIVE	NUMBER OF FANS	PEAK WATTS B x E x 746 / (C X D)
Supply Fan	1.000	82.5%	100.0%	1.0	904

FILTER PRESSURE ADJUSTMENT EQUATION 144-A

A) If filter pressure drop is greater than 1 inch W.C. enter filter pressure drop. SPa on line 4 and Total Fan pressure SPf on Line 5.

B) Calculate Fan Adjustment and enter on Line 6.

C) Calculate Adjusted Fan Power Index and enter on Line 7.

Total Adjustments	
1) TOTAL FAN SYSTEM POWER (Watts, Sum Column F)	904
2) SUPPLY DESIGN AIRFLOW (CFM)	2,000
3) TOTAL FAN SYSTEM POWER INDEX (Row 1/Row 2)[1]	
4) SPa	
5) SPf	
6) Fan Adjustment = 1-(SPa - 1)/SPf	
7) ADJUSTED FAN POWER INDEX (Line 3 x Line 6)[1]	0.452

1. TOTAL FAN SYSTEM POWER INDEX or ADJUSTED FAN POWER INDEX must not exceed 0.8 W/cfm for Constant Volume systems or 1.25 W/cfm for VAV systems.

ITEM or SYSTEM TAG(S)

PRESCRIPTIVE MEASURES	T-24 Section	Capacity	Exception	Notes
Electric Resistance Heating [1]	144 (g)			
Heat Rejection System [2]	144 (h)			
Air Cooled Chiller Limitation [3]	144 (i)			

1 Total installed capacity (MBtu/hr) of all electric heat on this project exclusive of electric auxiliary heat for heat pumps. If electric heat is used, explain which exception(s) to Section(g) apply.

2. Are centrifugal fan cooling towers used on this project? (Enter "Yes" or "No") If centrifugal fan cooling tower are used, explain which exception(s) to Section 144(h) apply.

3. Total installed capacity (tons) of all water and air cooled chillers under this permit. If there are more than 100 tons of air-cooled chiller capacity being installed, explain which exception(s) to Section 144(i) apply.

MECHANICAL SIZING AND FAN POWER — MECH-4-C

PROJECT NAME: Industrial Building Alteration (Mechanical)	DATE: 3/28/2008
SYSTEM NAME: S12	FLOOR AREA: 1,016

FAN POWER CONSUMPTION

A	B	C	D	E	F
FAN DESCRIPTION	DESIGN BRAKE HP	EFFICIENCY MOTOR	EFFICIENCY DRIVE	NUMBER OF FANS	PEAK WATTS B x E x 746 / (C X D)
Supply Fan	1.000	82.5%	100.0%	1.0	904

FILTER PRESSURE ADJUSTMENT EQUATION 144-A

A) If filter pressure drop is greater than 1 inch W.C. enter filter pressure drop, SPa on line 4 and Total Fan pressure SPf on Line 5.

B) Calculate Fan Adjustment and enter on Line 6.

C) Calculate Adjusted Fan Power Index and enter on Line 7.

Total Adjustments	
1) TOTAL FAN SYSTEM POWER (Watts, Sum Column F)	904
2) SUPPLY DESIGN AIRFLOW (CFM)	2,000
3) TOTAL FAN SYSTEM POWER INDEX (Row 1/Row 2)[1]	
4) SPa	
5) SPf	
6) Fan Adjustment = 1-(SPa - 1)/SPf	
7) ADJUSTED FAN POWER INDEX (Line 3 x Line 6)[1]	0.452

1. TOTAL FAN SYSTEM POWER INDEX or ADJUSTED FAN POWER INDEX must not exceed 0.8 W/cfm for Constant Volume systems or 1.25 W/cfm for VAV systems.

ITEM or SYSTEM TAG(S)

PRESCRIPTIVE MEASURES	T-24 Section	Capacity	Exception	Notes
Electric Resistance Heating [1]	144 (g)			
Heat Rejection System [2]	144 (h)			
Air Cooled Chiller Limitation [3]	144 (i)			

1. Total installed capacity (MBtu/hr) of all electric heat on this project exclusive of electric auxiliary heat for heat pumps. If electric heat is used, explain which exception(s) to Section(g) apply.
2. Are centrifugal fan cooling towers used on this project? (Enter "Yes" or "No") If centrifugal fan cooling tower are used, explain which exception(s) to Section 144(h) apply.
3. Total installed capacity (tons) of all water and air cooled chillers under this permit. If there are more than 100 tons of air-cooled chiller capacity being installed, explain which exception(s) to Section 144(i) apply.

MECHANICAL SIZING AND FAN POWER — MECH-4-C

PROJECT NAME: Industrial Building Alteration (Mechanical)
DATE: 3/28/2008
SYSTEM NAME: S13
FLOOR AREA: 1,010

FAN POWER CONSUMPTION

A	B	C	D	E	F
FAN DESCRIPTION	DESIGN BRAKE HP	EFFICIENCY MOTOR	EFFICIENCY DRIVE	NUMBER OF FANS	PEAK WATTS B x E x 746 / (C X D)
Supply Fan	1.000	82.5%	100.0%	1.0	904

FILTER PRESSURE ADJUSTMENT EQUATION 144-A

A) If filter pressure drop is greater than 1 inch W.C. enter filter pressure drop. SPa on line 4 and Total Fan pressure SPf on Line 5.

B) Calculate Fan Adjustment and enter on Line 6.

C) Calculate Adjusted Fan Power Index and enter on Line 7.

Total Adjustments	
1) TOTAL FAN SYSTEM POWER (Watts, Sum Column F)	904
2) SUPPLY DESIGN AIRFLOW (CFM)	2,000
3) TOTAL FAN SYSTEM POWER INDEX (Row 1/Row 2)[1]	
4) SPa	
5) SPf	
6) Fan Adjustment = 1-(SPa - 1)/SPf	
7) ADJUSTED FAN POWER INDEX (Line 3 x Line 6)[1]	0.452

1. TOTAL FAN SYSTEM POWER INDEX or ADJUSTED FAN POWER INDEX must not exceed 0.8 W/cfm for Constant Volume systems or 1.25 W/cfm for VAV systems.

ITEM or SYSTEM TAG(S)

PRESCRIPTIVE MEASURES	T-24 Section	Capacity	Exception	Notes
Electric Resistance Heating [1]	144 (g)			
Heat Rejection System [2]	144 (h)			
Air Cooled Chiller Limitation [3]	144 (i)			

1. Total installed capacity (MBtu/hr) of all electric heat on this project exclusive of electric auxiliary heat for heat pumps. If electric heat is used, explain which exception(s) to Section(g) apply.
2. Are centrifugal fan cooling towers used on this project? (Enter "Yes" or "No") If centrifugal fan cooling tower are used, explain which exception(s) to Section 144(h) apply.
3. Total installed capacity (tons) of all water and air cooled chillers under this permit. If there are more than 100 tons of air-cooled chiller capacity being installed, explain which exception(s) to Section 144(i) apply.

MECHANICAL SIZING AND FAN POWER — MECH-4-C

PROJECT NAME: Industrial Building Alteration (Mechanical)	DATE: 3/28/2008
SYSTEM NAME: S14	FLOOR AREA: 1,242

FAN POWER CONSUMPTION

A	B	C	D	E	F
FAN DESCRIPTION	DESIGN BRAKE HP	EFFICIENCY MOTOR	EFFICIENCY DRIVE	NUMBER OF FANS	PEAK WATTS B x E x 746 / (C X D)
Supply Fan	1.000	82.5%	100.0%	1.0	904

FILTER PRESSURE ADJUSTMENT EQUATION 144-A

A) If filter pressure drop is greater than 1 inch W.C. enter filter pressure drop. SPa on line 4 and Total Fan pressure SPf on Line 5.

B) Calculate Fan Adjustment and enter on Line 6.

C) Calculate Adjusted Fan Power Index and enter on Line 7.

Total Adjustments	
1) TOTAL FAN SYSTEM POWER (Watts, Sum Column F)	904
2) SUPPLY DESIGN AIRFLOW (CFM)	2,000
3) TOTAL FAN SYSTEM POWER INDEX (Row 1/Row 2)[1]	
4) SPa	
5) SPf	
6) Fan Adjustment = 1-(SPa - 1)/SPf	
7) ADJUSTED FAN POWER INDEX (Line 3 x Line 6)[1]	0.452

1. TOTAL FAN SYSTEM POWER INDEX or ADJUSTED FAN POWER INDEX must not exceed 0.8 W/cfm for Constant Volume systems or 1.25 W/cfm for VAV systems.

ITEM or SYSTEM TAG(S)

PRESCRIPTIVE MEASURES	T-24 Section	Capacity	Exception	Notes
Electric Resistance Heating [1]	144 (g)			
Heat Rejection System [2]	144 (h)			
Air Cooled Chiller Limitation [3]	144 (i)			

1. Total installed capacity (MBtu/hr) of all electric heat on this project exclusive of electric auxiliary heat for heat pumps. If electric heat is used, explain which exception(s) to Section(g) apply.
2. Are centrifugal fan cooling towers used on this project? (Enter "Yes" or "No") If centrifugal fan cooling tower are used, explain which exception(s) to Section 144(h) apply.
3. Total installed capacity (tons) of all water and air cooled chillers under this permit. If there are more than 100 tons of air-cooled chiller capacity being installed, explain which exception(s) to Section 144(i) apply.

MECHANICAL MANDATORY MEASURES

Part 1 of 2 **MECH-MM**

PROJECT NAME: Industrial Building Alteration (Mechanical)

DATE: 3/28/2008

		DESCRIPTION	Designer	Enforcement
		Equipment and Systems Efficiencies		
X	§111	Any appliance for which there is a California standard established in the Appliance Efficiency Regulations will comply with the applicable standard.		
X	§115(a)	Fan type central furnaces shall not have a pilot light.		
X	§123	Piping, except that conveying fluids at temperatures between 60 and 105 degrees Fahrenheit, or within HVAC equipment, shall be insulated in accordance with Standards Section 123.		
X	§124	Air handling duct systems shall be installed and insulated in compliance with Sections 601, 602, 603, 604, and 605 of the 2001 CMC Standards.		
		Controls		
	§122(e)	Each space conditioning system shall be installed with one of the following:		
X	§122(e)1A	Each space conditioning system serving building types such as offices and manufacturing facilities (and all others not explicitly exempt from the requirements of Section 112 (d)) shall be installed with an automatic time switch with an accessible manual override that allows operation of the system during off-hours for up to 4 hours. The time switch shall be capable of programming different schedules for weekdays and weekends and have program backup capabilities that prevent the loss of the device's program and time setting for at least 10 hours if power is interrupted; or		
	§122(e)1B	An occupancy sensor to control the operating period of the system; or		
X	§122(e)1C	A 4-hour timer that can be manually operated to control the operating period of the system.		
X	§122(e)2	Each space conditioning system shall be installed with controls that temporarily restart and temporarily operate the system as required to maintain a setback heating and/or a setup cooling thermostat setpoint.		
	§122(g)	Each space conditioning system serving multiple zones with a combined conditioned floor area more than 25,000 square feet shall be provided with isolation zones. Each zone: shall not exceed 25,000 square feet; shall be provided with isolation devices, such as valves or dampers, that allow the supply of heating or cooling to be setback or shut off independently of other isolation areas; and shall be controlled by a time control device as described above.		
X	§122(a&b)	Each space conditioning system shall be controlled by an individual thermostat that responds to temperature within the zone. Where used to control heating, the control shall be adjustable down to 55 degrees F or lower. For cooling, the control shall be adjustable up to 85 degrees F or higher. Where used for both heating and cooling, the control shall be capable of providing a deadband of at least 5 degrees F within which the supply of heating and cooling is shut off or reduced to a minimum.		
X	§122(c)	Thermostats shall have numeric setpoints in degrees Fahrenheit (F) and adjustable setpoint stops accessible only to authorized personnel.		
X	§112(b)	Heat pumps shall be installed with controls to prevent electric resistance supplementary heater operation when the heating load can be met by the heat pump alone.		

MECHANICAL MANDATORY MEASURES

Part 2 of 2 **MECH-MM**

PROJECT NAME	DATE
Industrial Building Alteration (Mechanical)	3/28/2008

		Description	Designer	Enforcement
		Ventilation		
X	§121(e)	Controls shall be provided to allow outside air dampers or devices to be operated at the ventilation rates as specified on these plans.		
X	§122(f)	Gravity or automatic dampers interlocked and closed on fan shutdown shall be provided on the outside air intakes and discharges of all space conditioning and exhaust systems.		
X	§122(f)	All gravity ventilating systems shall be provided with automatic or readily accessible manually operated dampers in all openings to the outside, except for combustion air openings.		
☐	§121(f)1	Air Balancing: The system shall be balanced in accordance with the National Environmental Balancing Bureau (NEBB) Procedural Standards (1983), or Associated Air Balance Council (AABC) National Standards (1989); or		
X	§121(f)2	Outside Air Certification: The system shall provide the minimum outside air as shown on the mechanical drawings, and shall be measured and certified by the installing licensed C-20 mechanical contractor and certified by (1) the design mechanical engineer, (2) the installing licenced C-20 mechanical contractor, or (3) the person with overall responsibility for the design of the ventilation system; or		
☐	§121(f)3	Outside Air Measurement: The system shall be equipped with a calibrated local or remote device capable of measuring the quantity of outside air on a continuous basis and displaying that quantity on a readily accessible display divice; or		
☐	§121(f)4	Another method approved by the Commission.		
		Service Water Heating Systems NA		
☐	§113(b)2	If a circulating hot water system is installed, it shall have a control capable of automatically turning off the circulating pump(s) when hot water is not required.		
☐	§113(c)	Lavatories in restrooms of public facilities shall be equipped with controls to limit the outlet temperature to 110 degrees F.		

48SD/48SDN
Comfort™ 13 Single–Packaged Air Conditioner and Gas Furnace System with R–22 Refrigerant
1–1/2 to 5 Nominal Tons (Sizes 018–060) Single and Three Phase

Carrier
Turn to the Experts.

Product Data

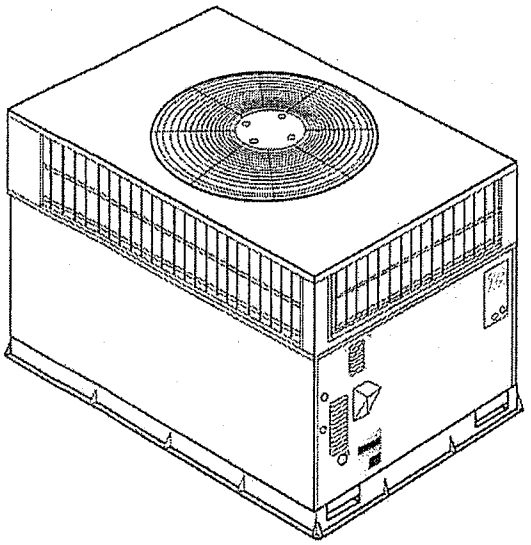

A99338

Unit 48SD

Single-Packaged Rooftop Products with Energy-Saving Features.

- Direct Spark Ignition
- Low Sound Levels
- Up to 81% AFUE
- 13 SEER

FEATURES/BENEFITS

One-piece heating and cooling units with low sound levels, easy installation, low maintenance, and dependable performance.

Easy Installation

Factory-assembled package is a compact, fully self-contained, combination gas heating/electric cooling unit that is pre-wired, pre-piped, and pre-charged for minimum installation expense.

These units are available in a variety of standard and optional heating/cooling size combinations with voltage options to meet residential and light commercial requirements. Units are lightweight and install easily on a rooftop or at ground level. The high-tech composite basepan eliminates rust problems associated with ground level applications.

Convertible duct configuration

Unit is designed for easy use in either downflow or horizontal applications. Each unit is easily converted from horizontal to downflow with the use of the two standard duct covers.

Efficient operation

High-efficiency design with SEERs (Seasonal Energy Efficiency Ratios) of 13.0 and AFUE (Annual Fuel Utilization Efficiency) ratings as high as 81%.

Energy-saving, direct spark ignition saves gas by operating only when the room thermostat calls for heating. Standard units are furnished with natural gas controls. A low-cost field-installed kit for propane conversion is available for all units.

Low NOx units are designed for California installations. These models meet the Californian maximum oxides of nitrogen (NOx) emissions requirement of 40 nanograms/joule or less as shipped from the factory and MUST be installed in California Air Quality Management Districts where a Low NOx rule exists.

Durable, dependable components

Compressors are designed for high efficiency. Each compressor is hermetically sealed against contamination to help promote longer life and dependable operation. Each compressor also has vibration isolation to provide quieter operation. All compressors have internal high pressure and overcurrent protection.

Monoport inshot burners produce precise air-to-gas mixture, which provides for clean and efficient combustion. The large monoport on the inshot (or injection type) burners seldom, if ever, requires cleaning. All gas furnace components are accessible in one compartment.

Turbo-tubular™ heat exchangers are constructed of aluminized steel for corrosion resistance and optimum heat transfer for improved efficiency. The tubular design permits hot gases to make multiple passes across the path of the supply air.

In addition, dimples located on the heat exchanger walls force the hot gases to stay in close contact with the walls, improving heat transfer.

Direct-drive multi-speed, PSC (permanent split capacitor) blower motor is standard on all 48SD models.

Direct-drive, PSC condenser-fan motors are designed to help reduce energy consumption and provide for cooling operation down to 40°F (4°C) outdoor temperature. Motormaster® II low ambient kit is available as a field-installed accessory and does not require a special motor.

Corporate thermostats include the Time Guard® II anti-short cycle protection circuitry. If an Original Equipment Manufacture (OEM) thermostat is used the Time Guard II field installed anti-short cycle kit must be used.

Refrigerant system is designed to provide dependability. Liquid refrigerant strainers are used to promote clean, unrestricted operation. Each unit leaves the factory with a full refrigerant charge. Refrigerant service connections make checking operating pressures easier.

Evaporator and condenser coils are computer-designed for optimum heat transfer and cooling efficiency. The evaporator coil is fabricated from copper tube and aluminum fins and is located inside the unit for protection against damage. The condenser coil is internally mounted on the top tier of the unit. A FIOP (Factory-Installed Option) metal louvered grille is available on all models. Copper fin coils and pre-coated fin coils are available from the factory by special order. These coils are recommended in applications where aluminum fins are likely to be damaged due to corrosion. They are ideal for seacoast applications.

Low sound ratings ensure a quiet indoor and outdoor environment with sound ratings as low as 72dBA. (See page 3.)

Easy to service cabinets provide easy single-panel accessibility to serviceable components during maintenance and installation. The basepan with integrated drain provides easy ground level installation with or without a mounting pad. Convenient handholds are provided to manipulate the unit on the jobsite. A nesting feature ensures a positive basepan to roof curb seal when the unit is roof mounted. A convenient 3/4-in. (19 mm) wide perimeter flange makes frame mounting on a rooftop easy.

Downflow operation is easily provided in the field to allow vertical ductwork connections. The basepan utilizes knockout style seals on the bottom openings to ensure a positive seal in the horizontal airflow mode.

Integrated Gas Control (IGC) board provides safe and efficient control of heating and simplifies trouble-shooting through its built-in diagnostic function.

Cabinets are constructed of heavy-duty, phosphated, zinc-coated prepainted steel capable of withstanding 500 hours in salt spray. Interior surfaces of the evaporator/heat exchanger compartment are insulated with cleanable semi-rigid insulation board, which keeps the conditioned air from being affected by the outdoor ambient temperature and provides improved indoor air quality. (Conforms to American Society of Heating, Refrigeration and Air Conditioning Engineers No. 62P.) The sloped drain minimizes standing water in the drains which is provided with an external drain.

48SD

MODEL NUMBER NOMENCLATURE

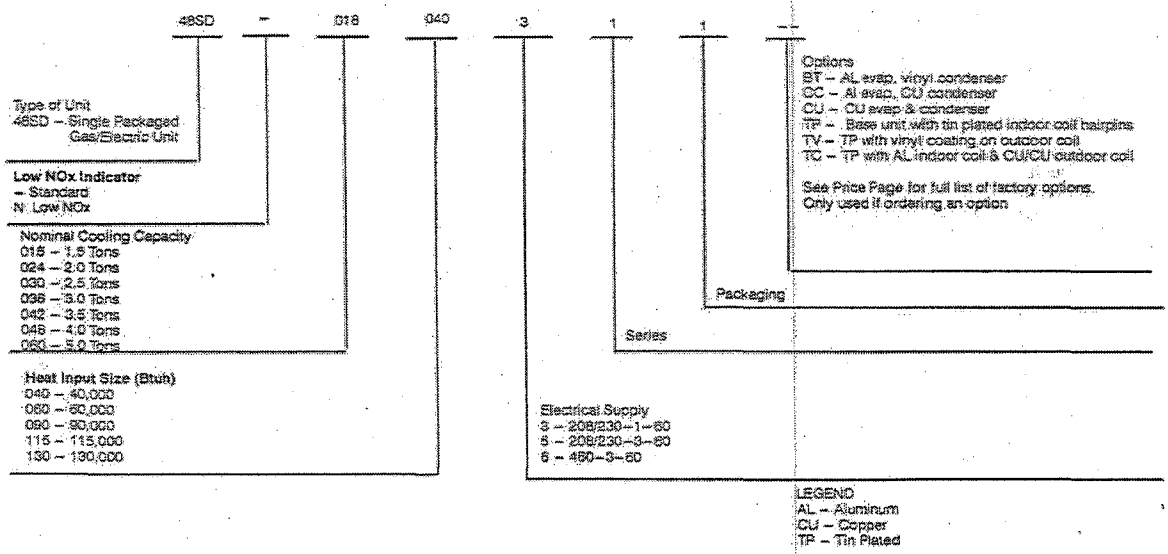

ARI* CAPACITIES

COOLING CAPACITIES AND EFFICIENCIES

UNIT 48SD	NOMINAL TONS	STANDARD CFM	NET COOLING CAPACITIES (Btuh)	SEER†	SOUND RATINGS‡ (dBA)
018040	1-1/2	600	17,200	13.0	72
024040 024060	2	800	22,600	13.0	72
030040 030060	2-1/2	1000	28,000	13.0	72
036060 036090	3	1200	35,000	13.0	72
042060 042090	3-1/2	1400	40,000	13.0	73
048090 048115 048130	4	1600	47,000	13.0	78
060090 060115 060130	5	1750	57,500	13.0	78

LEGEND
db—Dry Bulb
wb—Wet Bulb
SEER—Seasonal Energy Efficiency Ratio
* Air Conditioing & Refrigeration Institute.
† Rated in accordance with U.S. Government DOE Department of Energy) test procedures and/or ARI Standards 210/240–89.
‡ Tested in accordance with ARI Standard 270–95 (not listed in ARI).

Notes:
1. Ratings are net values, reflecting the effects of circulating fan heat. Ratings are based on:
Cooling Standard: 80°F (26°C) db, 67°F (19°C) wb indoor entering –air temperature and 95°F (35°C) db outdoor entering–air temperature.
2. Before purchasing this appliance, read important energy cost and efficiency information available from your retailer.

48SD

GAS HEATING CAPACITIES AND EFFICIENCIES

UNIT 48SD	HEATING INPUT (Btuh)	OUTPUT CAPACITY (Btuh)	TEMPERATURE RISE RANGE (°F)	AFUE (%)
018040	40,000	32,000 (48SD) 31,000 (48SDN)	30-60	79.7 (48SD) 79.2 (48SDN)
024040 030040	40,000	32,000	20-50	80.1
024060 030060 036060 042060	60,000	47,000	35-65 35-65 25-55 25-55	78.4 78.4 78.7 78.7
036090 042090 048090 060090	90,000 90,000 90,000 90,000	72,000 72,000 71,000 71,000	40-70 40-70 25-55 25-55	79.9 79.9 78.5 78.6
048115 060115	115,000	93,000 (48SD) 90,000 (48SDN)	35-65	81.1 (48SD) 78.3 (48SDN)
048130 060130	130,000	104,000	40-70	80.3

LEGEND
AFUE—Annual Fuel Utilization Efficiency
NOTE: Before purchasing this appliance, read important energy cost and efficiency information available from your retailer.

ISO 9001:2000

OUTDOOR SOUND: OCTAVE BAND DATA—DECIBELS (dB)

UNIT	48SD						
Frequency (Hz)	018	024	030	036	042	048	060
125	54.5	54.1	47.3	56.4	56.9	64.0	64.1
250	60.5	57.1	58.2	61.0	64.0	69.9	66.6
500	64.0	64.9	63.2	67.4	68.0	73.3	70.6
1000	66.5	67.6	66.1	68.1	67.7	73.5	72.6
2000	62.5	64.1	64.0	65.8	64.6	70.4	69.8
4000	58.5	59.7	61.3	64.8	61.3	66.7	67.5
8000	52.5	53.5	57.0	56.8	56.5	60.5	61.6

LEGEND
Sound Levels (10 decibels=1 bel)

PHYSICAL DATA

UNIT SIZE 48SD	018040	024040	024060	030040	030060	036060	036090	042060	042090
NOMINAL CAPACITY (ton)	1.5	2	2	2-1/2	2-1/2	3	3	3-1/2	3-1/2
OPERATING WEIGHT (lb)	290	343	343	355	355	360	360	450	450
(kg)	132	156	156	136	156	163	163	204	204
COMPRESSORS	Scroll	Scroll							
REFRIGERANT (R-22)									
Quantity (lb)	5.3	5.9	5.9	6.0	6.0	7.2	7.2	7.8	7.8
(kg)	2.4	2.7	2.7	2.7	2.7	3.3	3.3	3.5	3.5
REFRIGERANT METERING DEVICE	TXV	AccuRater							
Orifice ID (in.)	NA	0.065	0.065	0.070	0.070	0.080	0.080	0.084	0.084
CONDENSER COIL									
Rows—Fins/in.	1...21	2...21	2...21	2...21	2...21	2...21	2...21	2...21	2...21
Face Area (sq ft)	13.6	10.2	10.2	11.9	11.9	113.6	13.6	19.4	19.4
CONDENSER FAN									
Nominal Cfm	2200	2200	2200	2800	2800	3000	3000	3500	3500
Diameter (in.)	22	22	22	22	22	22	22	22	22
Motor Hp	1/8	1/8	1/8	1/8	1/8	1/8	1/8	1/8	1/8
(Rpm)	(825)	(825)	(825)	(825)	(825)	(825)	(825)	(825)	(825)
EVAPORATOR COIL									
Rows—Fins/in.	3...17	3...17	3...17	3...17	3...17	4...17	4...17	3...17	3...17
Face Area (sq ft)	3.7	3.7	3.7	3.7	3.7	3.7	3.7	4.7	4.7
EVAPORATOR BLOWER									
Nominal Airflow (Cfm)	800	800	800	1000	1000	1200	1200	1400	1400
Size (in.)	10x10	10x10	10x10	10x10	10x10	10x10	10x10	11x10	11x10
Size (mm)	254x254	254x254	254x254	254x254	254x254	254x254	254x254	279x254	279x254
Motor Hp	1/4	1/3	1/3	1/3	1/3	1/2	1/2	1/2	1/2
(RPM)	(825)	(1050)	(1050)	(1050)	(1050)	(1000)	(1000)	(1075)	(1075)
FURNACE SECTION*									
Burner Orifice No. (Qty—Drill Size) Natural Gas	2...44	2...44	2...38	2...44	2...38	2...36	3...38	2...36	3...36
Burner Orifice No. (Qty—Drill Size) Propane	2...50	2...50	2...46	2...50	2...46	2...46	3...46	2...46	3...46
RETURN-AIR FILTERS Throwaway (in.)†	20x20x1		20x24x1			24x30x1			
(mm)	508x508x25		508x610x25			610x762x25			

UNIT SIZE 48SD	048090	048115	048130	060090	060115	060130
NOMINAL CAPACITY (ton)	4	4	4	5	5	5
OPERATING WEIGHT (lb)	480	480	480	484	484	484
kg	218	218	218	220	220	220
COMPRESSORS	Scroll					
REFRIGERANT (R-22)						
Quantity (lb)	12.4	12.4	12.4	12.0	12.0	12.0
(kg)	5.6	5.6	5.6	5.4	5.4	5.4
REFRIGERANT METERING DEVICE	AccuRater					
Orifice ID (in.)	0.088	0.088	0.088	0.098	0.098	0.098
CONDENSER COIL						
Rows—Fins/in.	2...21	2...21	2...21	2...21	2...21	2...21
Face Area (sq ft)	19.4	19.4	19.4	19.4	19.4	19.4
CONDENSER FAN						
Nominal Cfm	3500	3500	3500	4200	4200	4200
Diameter (in.)	22	22	22	22	22	22
Motor Hp (Rpm)	1/4 (1100)	1/4 (1100)	1/4 (1100)	1/4 (1100)	1/4 (1100)	1/4 (1100)
EVAPORATOR COIL						
Rows—Fins/in.	3...17	3...17	3...17	4...17	4...17	4...17
Face Area (sq ft)	5.7	5.7	5.7	5.7	5.7	5.7
EVAPORATOR BLOWER						
Nominal Airflow (Cfm)	1600	1600	1600	1750	1750	1750
Size (in.)	11x10	11x10	11x10	11x10	11x10	11x10
Size (mm)	279x254	279x254	279x254	279x254	279x254	279x254
Motor Hp (RPM)	1/2 (1075)	1/2 (1075)	1/2 (1075)	1 (1040)	1 (1040)	1 (1040)
FURNACE SECTION*						
Burner Orifice No. (Qty—Drill Size) Natural Gas	3...38	3...33	3...31	3...38	3...33	3...31
Burner Orifice No. (Qty—Drill Size) Liquid Propane	3...46	3...42	3...41	3...46	3...42	3...41
RETURN-AIR FILTERS Throwaway						
(in.)†	24x36x1					
(mm)	610x914x25					

LEGEND

* Based on altitude of 0 to 2000 feet (0 to 610 m).

† Required filter sizes on shown are based on the larger of the ARI (Air Conditioning and Refrigeration Institute) rated cooling airflow or the heating airflow velocity of 300 ft/min for throwaway type or 450 ft/min for high-capacity type. Air filter pressure drop for non-standard filters must not exceed 0.08 in. wc.

48SD

BASE UNIT DIMENSIONS—48SD018-036

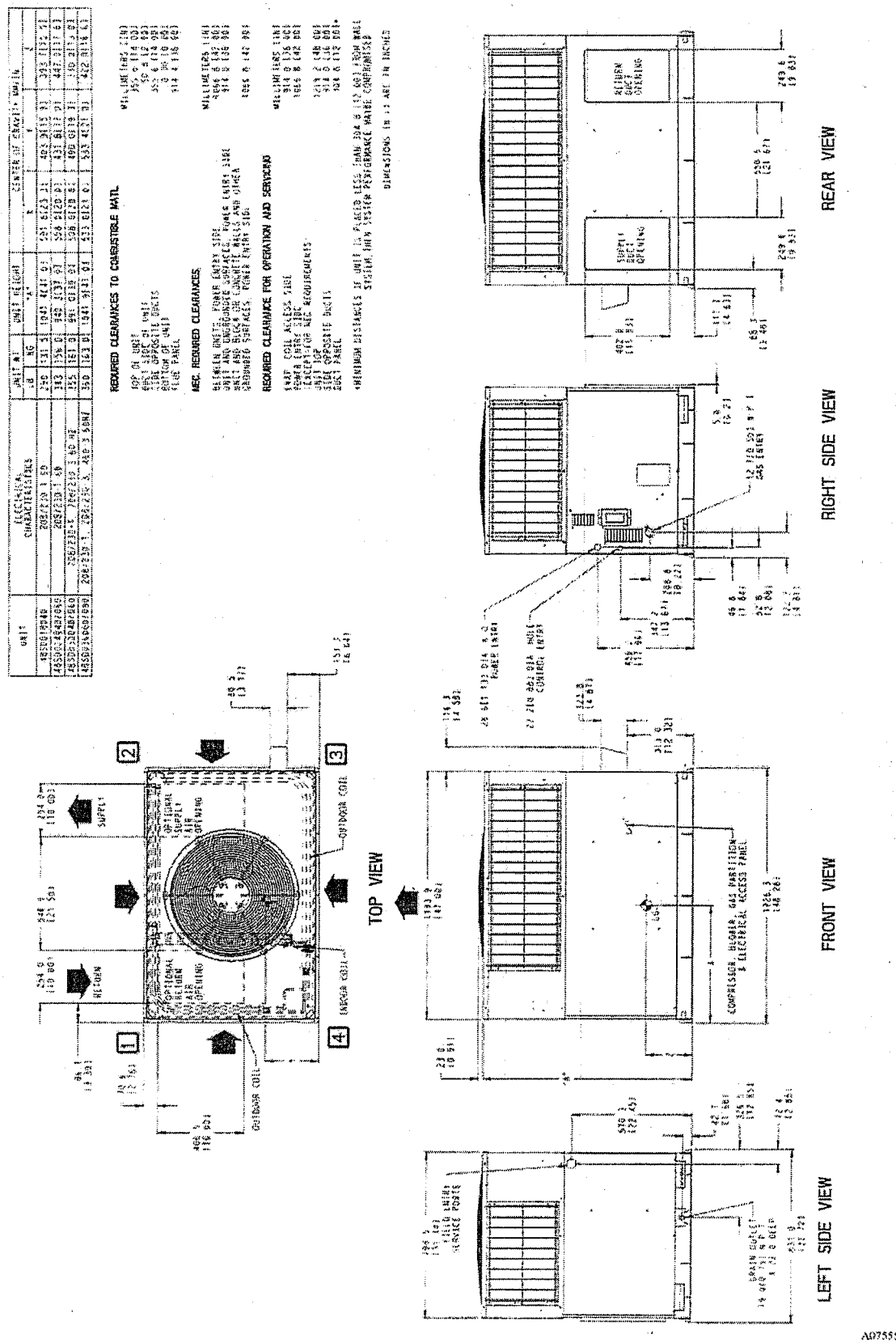

48SD

BASE UNIT DIMENSIONS—48SD042-060

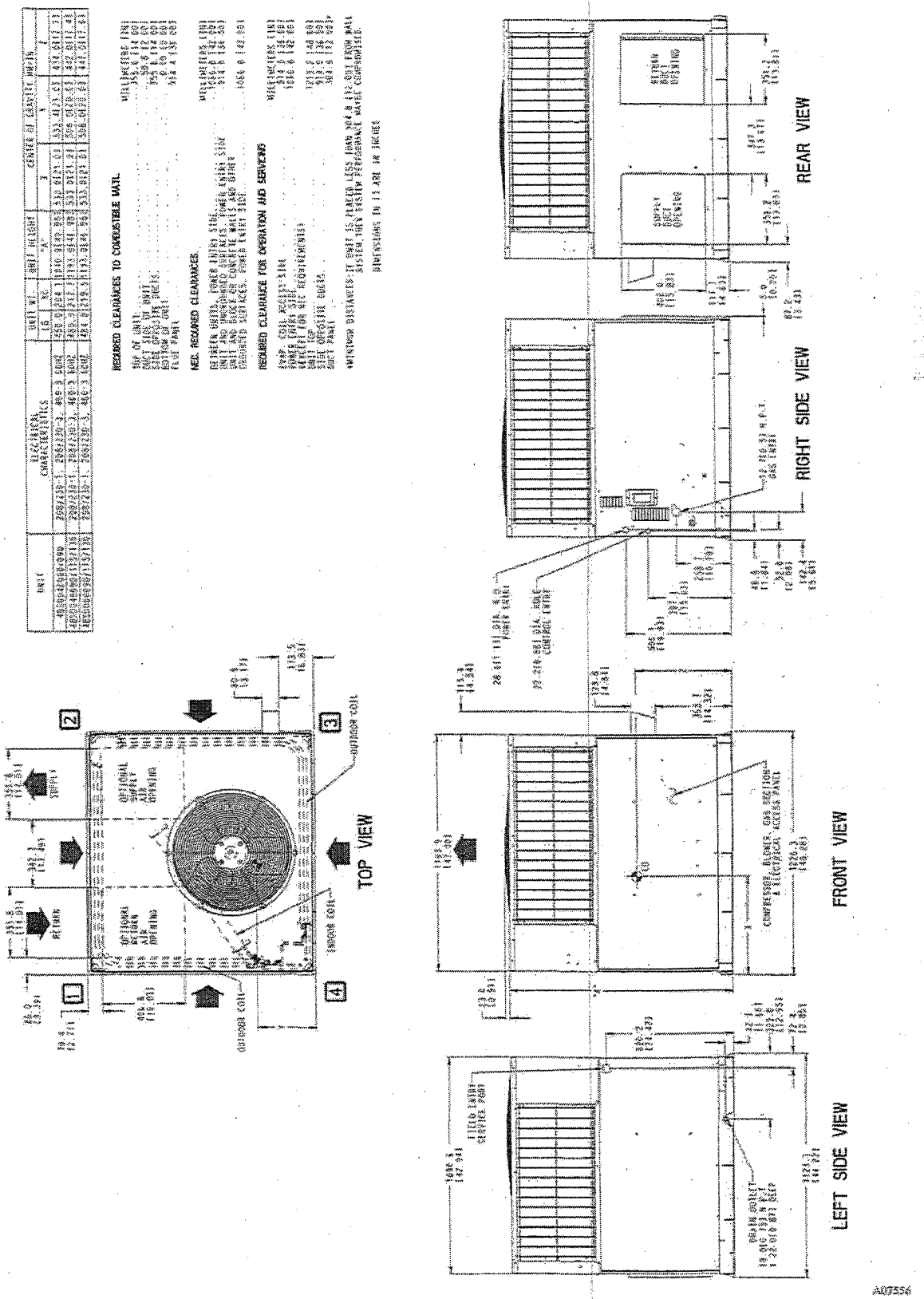

48SD CORNER WEIGHTS

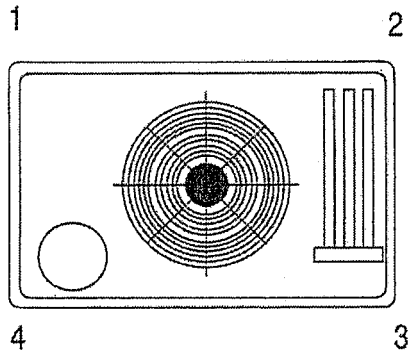

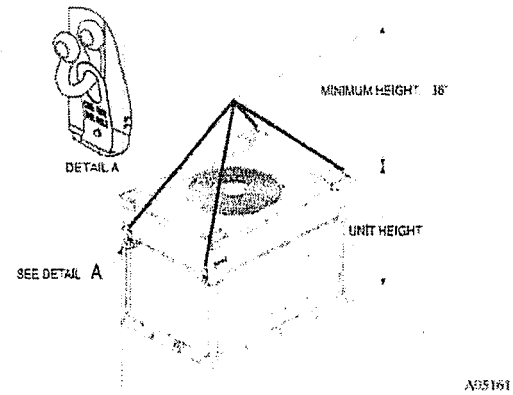

48SD

Unit	CORNER WEIGHTS (SMALL CABINET) 018 lb	018 kg	024 lb	024 kg	030 lb	030 kg	036 lb	036 kg
Unit Only Weight	290	132	343	156	355	161	360	163
Corner Weight 1	75	34	69	31	75	34	74	34
Corner Weight 2	62	28	53	24	56	25	55	25
Corner Weight 3	97	44	83	38	81	37	86	39
Corner Weight 4	56	25	138	63	143	65	145	66
Rigging Weight	309	140	353	160	365	166	370	168
Shipping Weight	344	156	383	173	395	179	400	181

Unit	CORNER WEIGHTS (LARGE CABINET) 042 lb	042 kg	048 lb	048 kg	060 lb	060 kg
Unit Only Weight	450	204	480	218	484	220
Corner Weight 1	90	41	97	44	98	45
Corner Weight 2	72	33	74	34	75	34
Corner Weight 3	110	50	116	53	118	54
Corner Weight 4	178	81	193	88	193	88
Rigging Weight	465	211	495	225	499	226
Shipping Weight	510	231	540	245	544	247

SELECTION PROCEDURE (WITH EXAMPLE)

1. Determine cooling and heating requirements at design conditions:

Given:

Required Cooling Capacity (TC) ..... 34,000 Btuh
Sensible Heat Capacity (SHC) ..... 25,000 Btuh
Required Heating Capacity ..... 60,000 Btuh
Condenser Entering Air Temperature ..... 95°F (35°C)
Indoor-Air Temperature 80°F (26°C) edb 67°F (19°C) ewb
Evaporator Air Quantity ..... 1200 CFM
External Static Pressure ..... 0.1 in. wc
Electrical Characteristics 208-1-60

2. Select unit based on required cooling capacity.

Enter Net Cooling Capacities table at outdoor entering temperature of 95°F (35°C). Unit 48SD036 at 1200 cfm and 67°F (19°C) ewb (entering wet bulb) will provide a total capacity of 36,000 Btuh and a SHC of 27,400 Btuh. Calculate SHC correction, if required, using Note 4 under Cooling Capacities tables.

3. Select heating capacity of unit to provide design condition requirement.

In the Heating Capacities and Efficiencies table on page 4, note that the unit 48SD036090 will provide 72,000 Btuh with an input of 90,000 Btuh.

4. Determine fan speed and power requirements at design conditions.

Before entering the air delivery tables, calculate the total static pressure required. From the given example, the Wet Coil Pressure Drop Table, and the Filter Pressure Drop table on page 16, find at 1200 cfm:

External Static Pressure	0.10 in. wc
Wet Coil	0.059 in. wc
Filter	0.13 in. wc
Total Static Pressure	0.29 in. wc

Enter the table for Dry Coil Air Delivery—horizontal and downflow Discharge on page 15. For 208 v operation, deduct 10% from the value given. At 0.33 ESP (external static pressure), the fan will deliver about 1404 cfm at medium speed. The fan speed should be set at medium speed.

5. Select unit that corresponds to power source available.

The Electrical Data table on page 21 shows that the unit is designed to operate at 208-1-60.

ELECTRICAL DATA

UNIT	NOMINAL V–PH–HZ	VOLTAGE RANGE MIN	VOLTAGE RANGE MAX	COMPRESSOR #1 RLA	COMPRESSOR #1 LRA	OFM FLA	IFM FLA	POWER SUPPLY MCA	POWER SUPPLY MOCP
48SD–018	208/230–1–60	187	253	7.7	40.3	0.9	1.6	12.3	20
48SD–024	208/230–1–60	187	253	10.4	54.0	0.9	2.0	15.9	25
48SD–030	208/230–1–60	187	253	14.1	66.0	0.9	2.0	20.5	30
	208/230–3–60	187	253	9.9	58.0	0.9	2.0	15.3	25
48SD–036	208/230–1–60	187	253	14.4	77.0	0.9	4.1	23.0	35
	208/230–3–60	187	253	10.0	73.0	0.9	4.1	17.5	25
	460–3–60	414	506	5.8	38.0	0.6	1.9	9.8	15
48SD–042	208/230–1–60	187	253	19.2	104.0	0.9	3.1	28.0	40
	208/230–3–60	187	253	12.8	88.0	0.9	3.1	20.0	30
	460–3–60	414	506	5.8	44.0	0.6	1.6	9.5	15
48SD–048	208/230–1–60	187	253	19.2	97.0	1.5	4.1	29.6	40
	208/230–3–60	187	253	12.5	88.0	1.5	4.1	21.2	30
	460–3–60	414	506	6.6	44.0	0.9	1.9	11.1	15
48SD–060	208/230–1–60	187	253	25.3	141.0	1.5	6.2	39.3	60
	208/230–3–60	187	253	15.8	110.0	1.5	6.2	27.5	40
	460–3–60	414	506	7.6	52.0	0.9	2.7	13.1	20

48SD

LEGEND

FLA — Full Load Amps
LRA — Locked Rotor Amps
MCA — Minimum Circuit Amps
MOCP — Maximum Overcurrent Protection
RLA — Rated Load Amps

NOTES:

1. In compliance with NEC (National Electrical Code) requirements for multimotor and combination load equipment (refer to NEC Articles 430 and 440), the overcurrent protective device for the unit shall be Power Supply fuse. The CGA (Canadian Gas Association) units may be fuse or circuit breaker.
2. Minimum wire size is based on 60 C copper wire. If other than 60 C wire is used, or if length exceeds wire length in table, determine size from NEC.
3. Unbalanced 3-Phase Supply Voltage
   Never operate a motor where a phase imbalance in supply voltage is greater than 2%. Use the following formula to determine the percentage of voltage imbalance

   % Voltage Imbalance

   $$= 100 \times \frac{\text{max voltage deviation from average voltage}}{\text{average voltage}}$$

* Heater capacity (kW) based on heater voltage of 208v & 240v. If power distibution voltage to unit varies from rated heater voltage, heater kW will vary accordingly.

EXAMPLE: Supply voltage is 230-3-60.

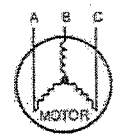

AB = 228 v
BC = 231 v
AC = 227 v

$$\text{Average Voltage} = \frac{228 + 231 + 227}{3} = \frac{686}{3} = 229$$

Determine maximum deviation from average voltage.
(AB) 229 - 228 = 1 v
(BC) 231 - 229 = 2 v
(AC) 229 - 227 = 2 v

Maximum deviation is 2 v.

Determine percent of voltage imbalance

$$\% \text{ Voltage Imbalance} = 100 \times \frac{2}{229} = 0.8\%$$

This amount of phase imbalance is satisfactory as it is below the maximum allowable 2%.

IMPORTANT: If the supply voltage phase imbalance is more than 2%, contact your local electric utility company immediately.